© 2021 All rights reserved.
This document may not, in whole or in part, be copied, photocopied, reproduced, translated or converted to any electronic or machine readable from without prior written permission of Mehmet Günce Akkoyun.
Engineer contact : akkoyun@me.com

Property of STF Irrigation

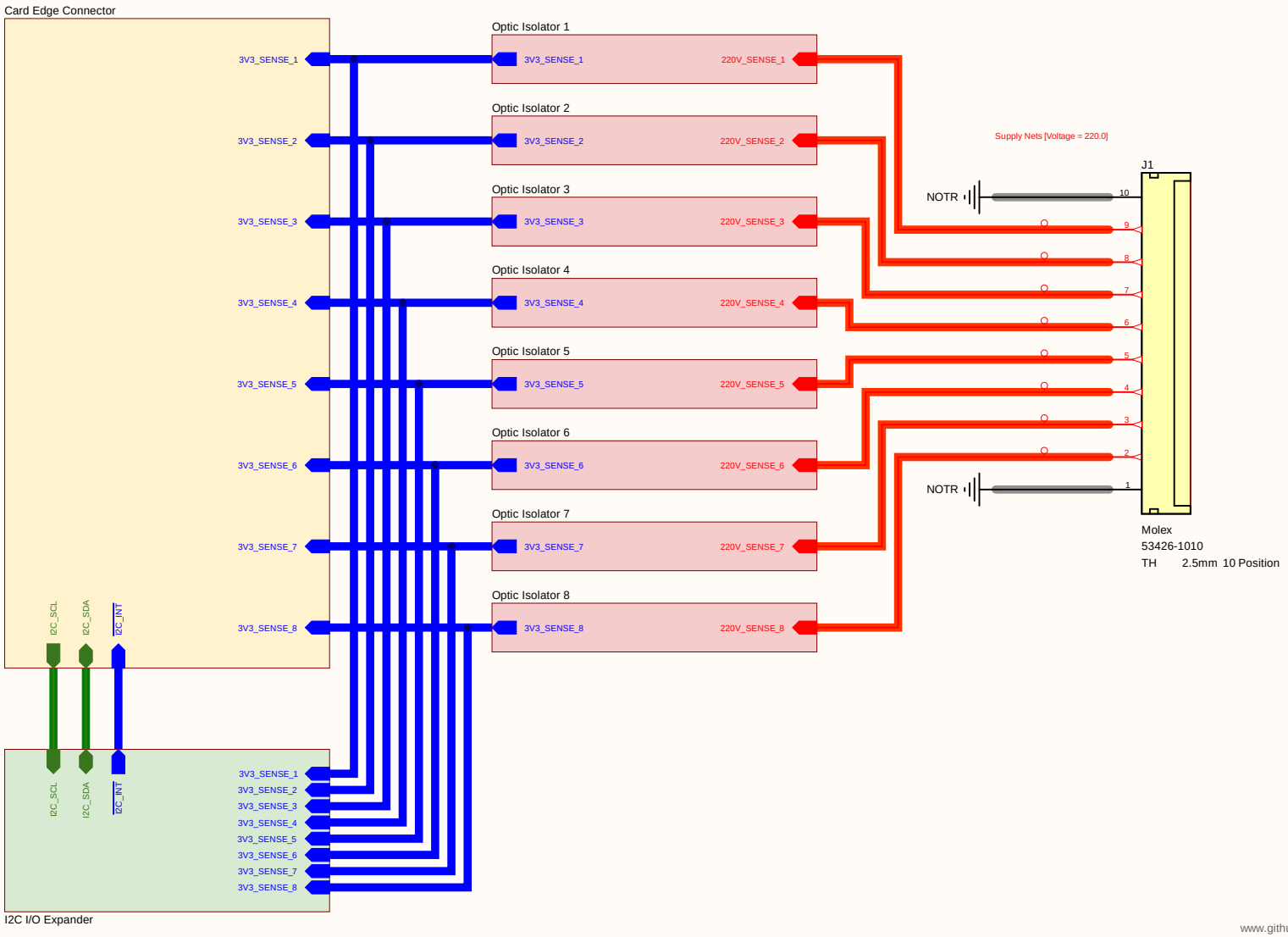

www.github.com/akkoyun/B001AA

B302AA Block Diagram		Engineer : Gunce Akkoyun	STF Res-Dev
		Customer : STF Irrigation	Buyuk Kayacik Mah. 4. OSB
Size : A4	Project : PowerStat	Product ID : --	103. Cad. No : 12
Date : 10.10.2022	Time : 11:42:31	Page : 1 / 10	Module ID : B302AA-PCIe	Selcuklu / Konya Türkiye
File : Block Diagram.SchDoc		Version : R1	
		Revision : 00.00.01	

Copyright 2022 STF Tarim (Commercial Secret)

© 2021 All rights reserved.
This document may not, in whole or in part, be copied, photocopied, reproduced, translated or converted to any electronic or machine readable from without prior written permission of Mehmet Günce Akkoyun.
Engineer contact : akkoyun@me.com

Property of STF Irrigation

J2

Bus Type : Mini PCI Express
Mating Connector : TE-1775862-2
Pitch : 0.8 mm
Number of Positions : 52

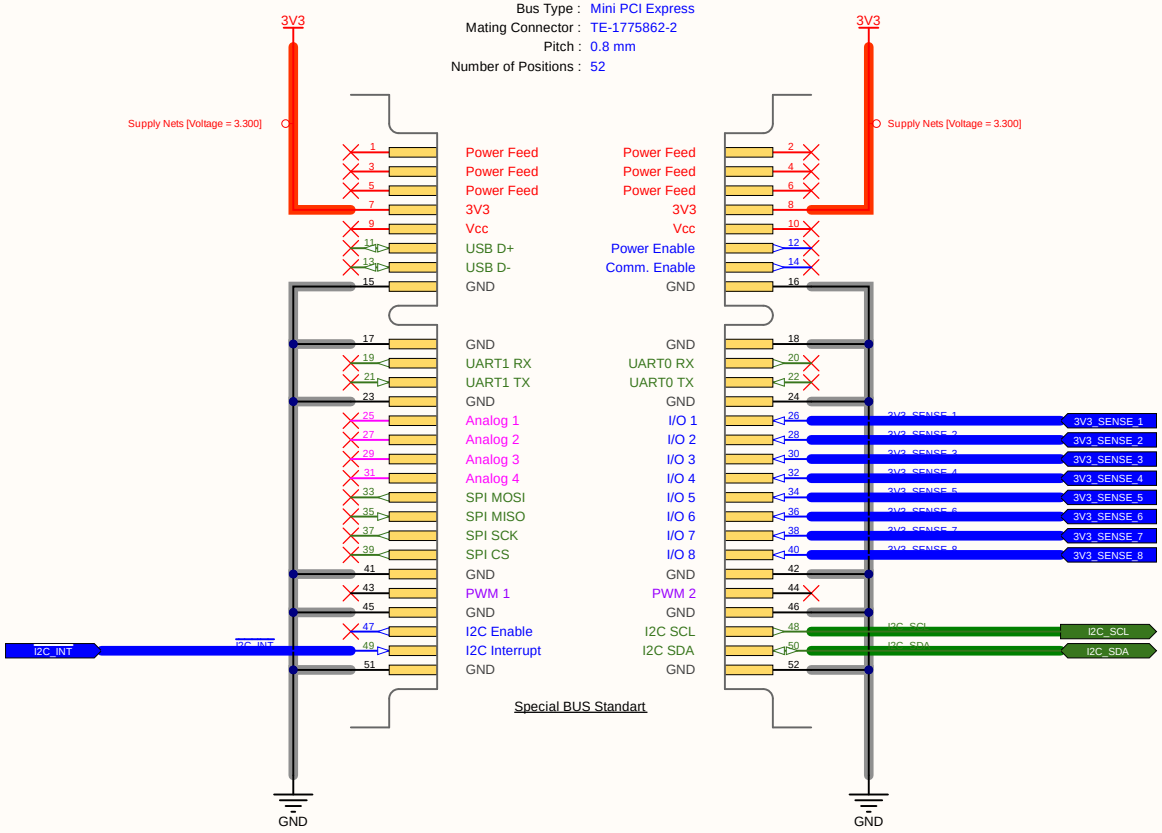

Special BUS Standart

www.github.com/akkoyun/B001AA

PCIe Card Edge Connector		Engineer : Gunce Akkoyun	STF Res-Dev
		Customer : STF Irrigation	Buyuk Kayacik Mah. 4. OSB
Size : A4	Project : PowerStat	Product ID : --	103. Cad. No : 12
Date : 10.10.2022	Time : 11:42:31	Page : 2 / 10	Module ID : B302AA-PCIe	Selcuklu / Konya Türkiye
File : Card Edge Connector.SchDoc		Version : R1	
		Revision : 00.00.01	

Copyright 2022 STF Tarim (Commercial Secret)

© 2021 All rights reserved.
This document may not, in whole or in part, be copied, photocopied, reproduced, translated or converted to any electronic or machine readable from without prior written permission of Mehmet Günce Akkoyun.
Engineer contact : akkoyun@me.com

Property of STF Irrigation

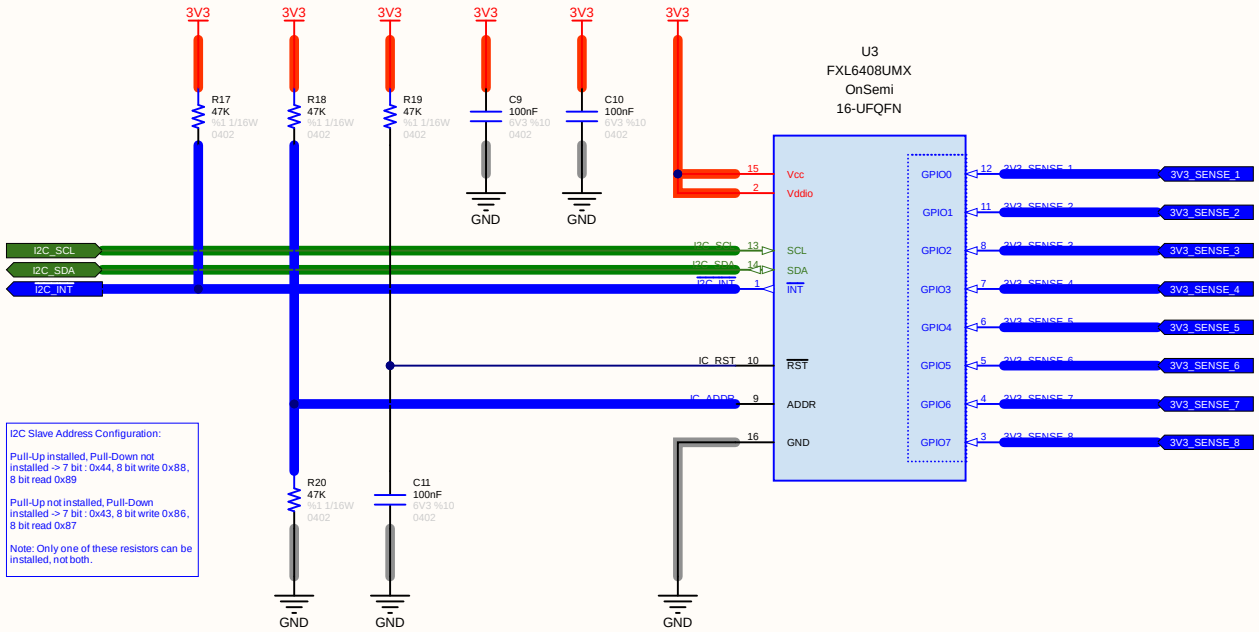

I2C Slave Address Configuration:

Pull-Up installed, Pull-Down not installed -> 7 bit : 0x44, 8 bit write 0x88, 8 bit read 0x89

Pull-Up not installed, Pull-Down installed -> 7 bit : 0x43, 8 bit write 0x86, 8 bit read 0x87

Note: Only one of these resistors can be installed, not both.

www.github.com/akkoyun/B001AA

I2C I/O Expander		Engineer : Gunce Akkoyun	STF Res-Dev
		Customer : STF Irrigation	Buyuk Kayacik Mah. 4. OSB
Size : A4	Project : PowerStat	Product ID : --	103. Cad. No : 12
Date : 10.10.2022	Time : 11:42:31	Page : 3 / 11	Module ID : B302AA-PCIe	Selcuklu / Konya Türkiye
File : I2C IO Expander.SchDoc		Version : R1	
		Revision : 00.00.01	

Copyright 2022 STF Tarim (Commercial Secret)

© 2021 All rights reserved.
This document may not, in whole or in part, be copied, photocopied, reproduced, translated or converted to any electronic or machine readable from without prior written permission of Mehmet Günce Akkoyun.
Engineer contact : akkoyun@me.com

Property of STF Irrigation

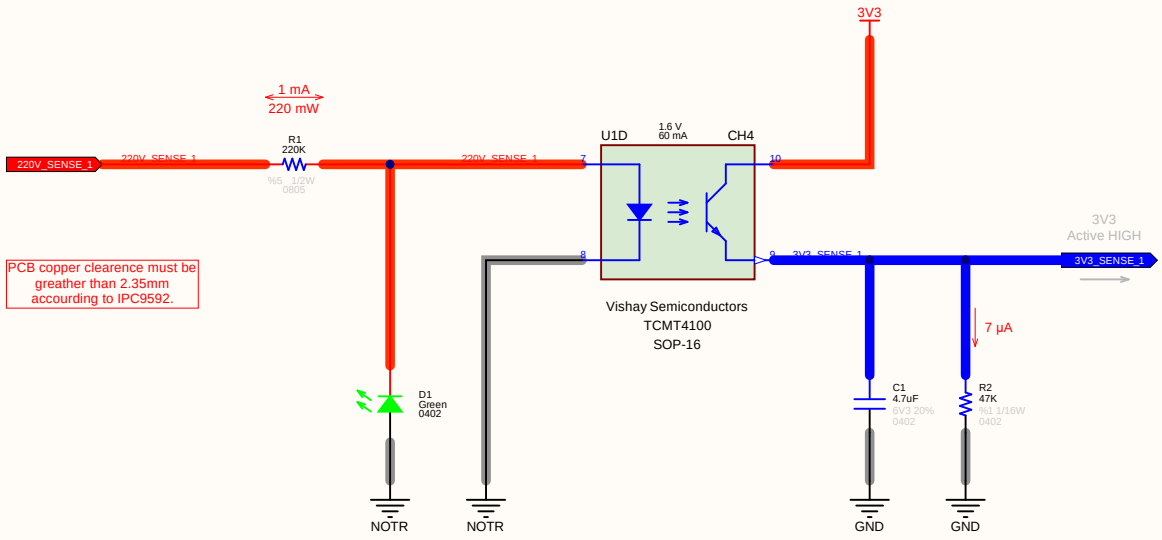

www.github.com/akkoyun/B001AA

Opto Isolator 1		Engineer : Gunce Akkoyun	STF Res-Dev
		Customer : STF Irrigation	Buyuk Kayacik Mah. 4. OSB
Size : A4	Project : PowerStat	Product ID : --	103. Cad. No : 12
		Module ID : B302AA-PCIe	Selcuklu / Konya Türkiye
Date : 10.10.2022	Time : 11:42:31	Page : 4 / 10	Version : R1
File : Opto Isolator 1.SchDoc		Revision : 00.00.01	

Copyright 2022 STF Tarim (Commercial Secret)

© 2021 All rights reserved.
This document may not, in whole or in part, be copied, photocopied, reproduced, translated or converted to any electronic or machine readable from without prior written permission of Mehmet Günce Akkoyun.
Engineer contact : akkoyun@me.com

Property of STF Irrigation

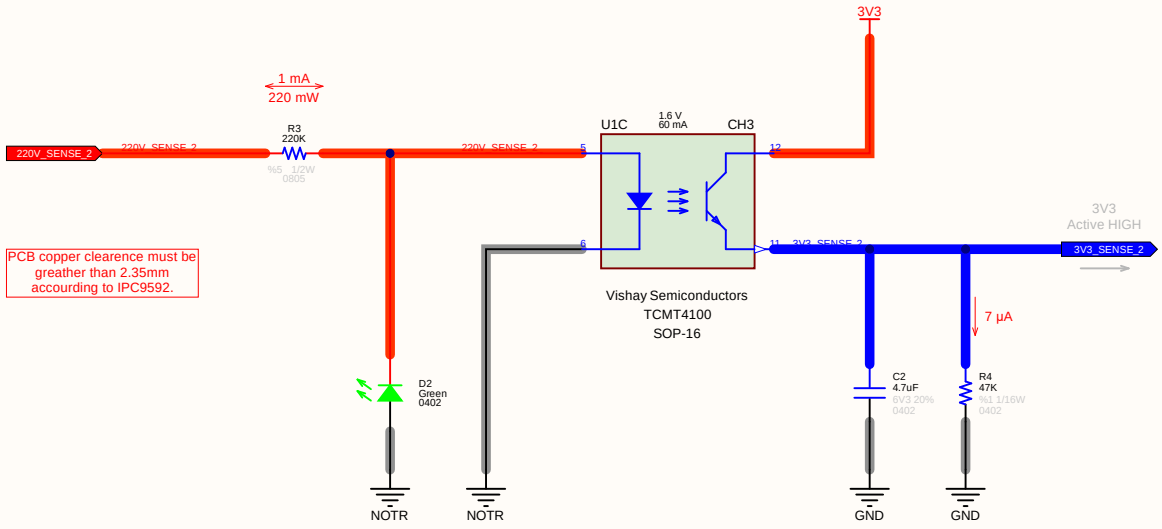

www.github.com/akkoyun/B001AA

Opto Isolator 2		Engineer : Gunce Akkoyun	STF Res-Dev
		Customer : STF Irrigation	Buyuk Kayacik Mah. 4. OSB
Size : A4	Project : PowerStat	Product ID : --	103. Cad. No : 12
		Module ID : B302AA-PCIe	Selcuklu / Konya Türkiye
Date : 10.10.2022	Time : 11:42:31	Page : 5 / 10	Version : R1
File : Opto Isolator 2.SchDoc			Revision : 00.00.01

Copyright 2022 STF Tarim (Commercial Secret)

© 2021 All rights reserved.
This document may not, in whole or in part, be copied, photocopied, reproduced, translated or converted to any electronic or machine readable from without prior written permission of Mehmet Günce Akkoyun.
Engineer contact : akkoyun@me.com

Property of STF Irrigation

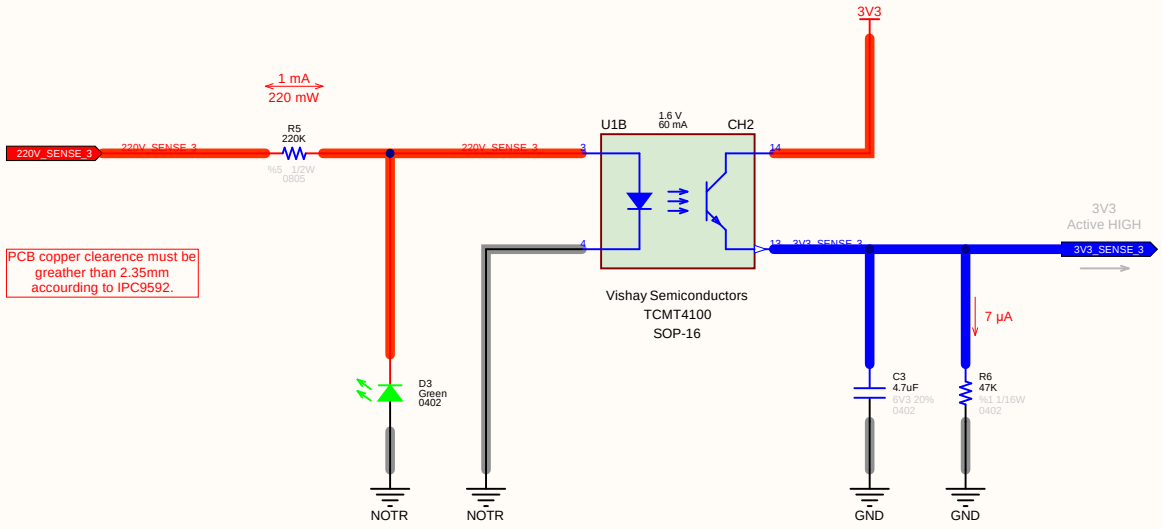

www.github.com/akkoyun/B001AA

Opto Isolator 3		Engineer :	Gunce Akkoyun
		Customer :	STF Irrigation
Size : A4	Project : PowerStat	Product ID :	--
		Module ID :	B302AA-PCIe
Date : 10.10.2022	Time : 11:42:31	Page : 6 / 10	Version : R1
File : Opto Isolator 3.SchDoc			Revision : 00.00.01

STF Res-Dev

Buyuk Kayacik Mah. 4. OSB
103. Cad. No : 12
Selcuklu / Konya Türkiye

Copyright 2022 STF Tarim (Commercial Secret)

© 2021 All rights reserved.
This document may not, in whole or in part, be copied, photocopied, reproduced, translated or converted to any electronic or machine readable from without prior written permission of Mehmet Günce Akkoyun.
Engineer contact : akkoyun@me.com

Property of STF Irrigation

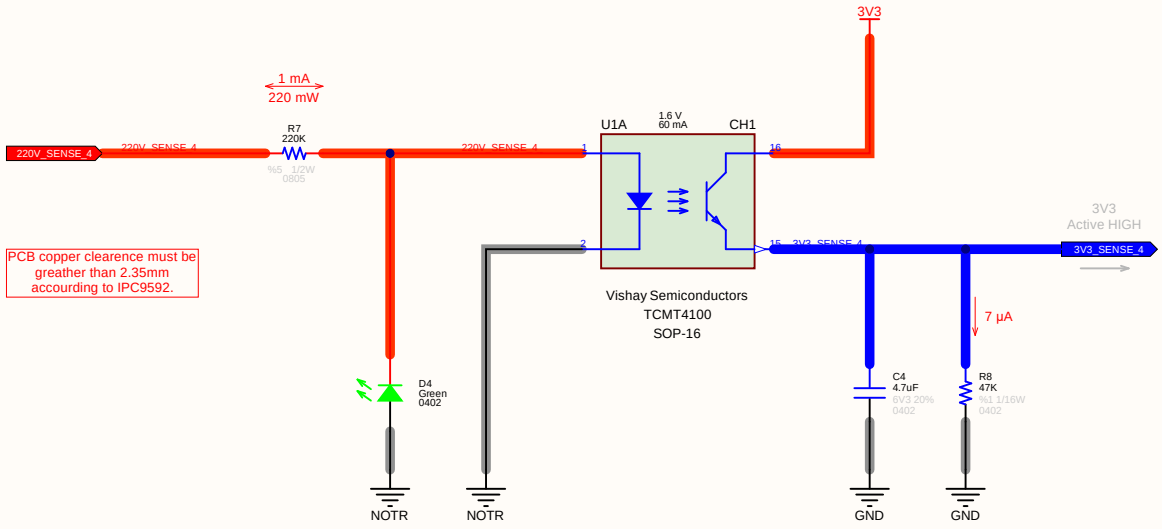

www.github.com/akkoyun/B001AA

Opto Isolator 4		Engineer : Gunce Akkoyun	STF Res-Dev
		Customer : STF Irrigation	Buyuk Kayacik Mah. 4. OSB
Size : A4	Project : PowerStat	Product ID : --	103. Cad. No : 12
		Module ID : B302AA-PCIe	Selcuklu / Konya Türkiye
Date : 10.10.2022	Time : 11:42:31	Page : 7 / 10	Version : R1
File : Opto Isolator 4.SchDoc		Revision : 00.00.01	

Copyright 2022 STF Tarim (Commercial Secret)

© 2021 All rights reserved.
This document may not, in whole or in part, be copied, photocopied, reproduced, translated or converted to any electronic or machine readable from without prior written permission of Mehmet Günce Akkoyun.
Engineer contact : akkoyun@me.com

Property of STF Irrigation

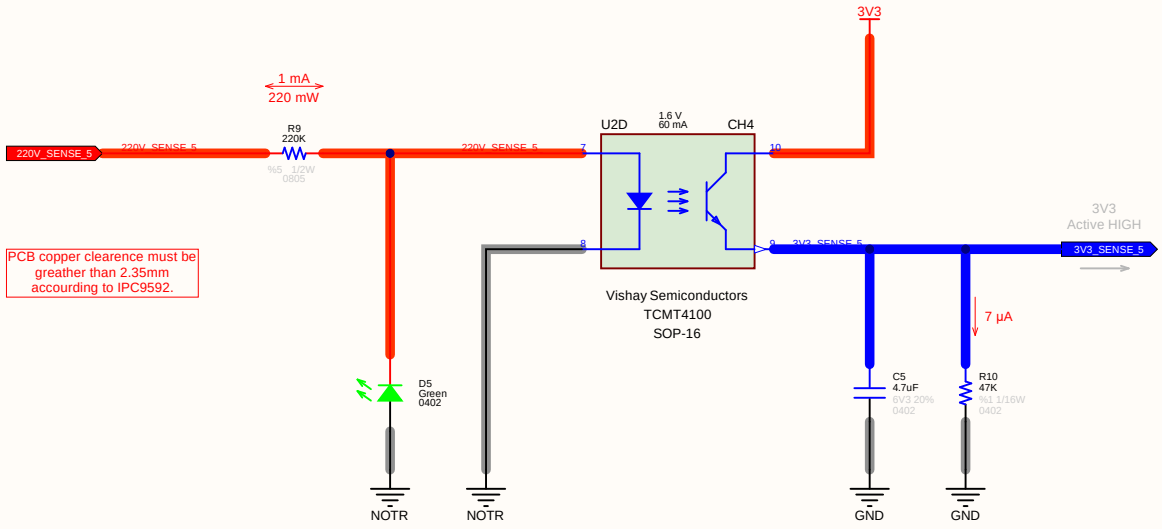

www.github.com/akkoyun/B001AA

Opto Isolator 5		Engineer : Gunce Akkoyun	STF Res-Dev
		Customer : STF Irrigation	Buyuk Kayacik Mah. 4. OSB
Size : A4	Project : PowerStat	Product ID : --	103. Cad. No : 12
		Module ID : B302AA-PCIe	Selcuklu / Konya Türkiye
Date : 10.10.2022	Time : 11:42:32	Page : 8 / 10	Version : R1
File : Opto Isolator 5.SchDoc		Revision : 00.00.01	

Copyright 2022 STF Tarim (Commercial Secret)

© 2021 All rights reserved.
This document may not, in whole or in part, be copied, photocopied, reproduced, translated or converted to any electronic or machine readable from without prior written permission of Mehmet Günce Akkoyun.
Engineer contact : akkoyun@me.com

Property of STF Irrigation

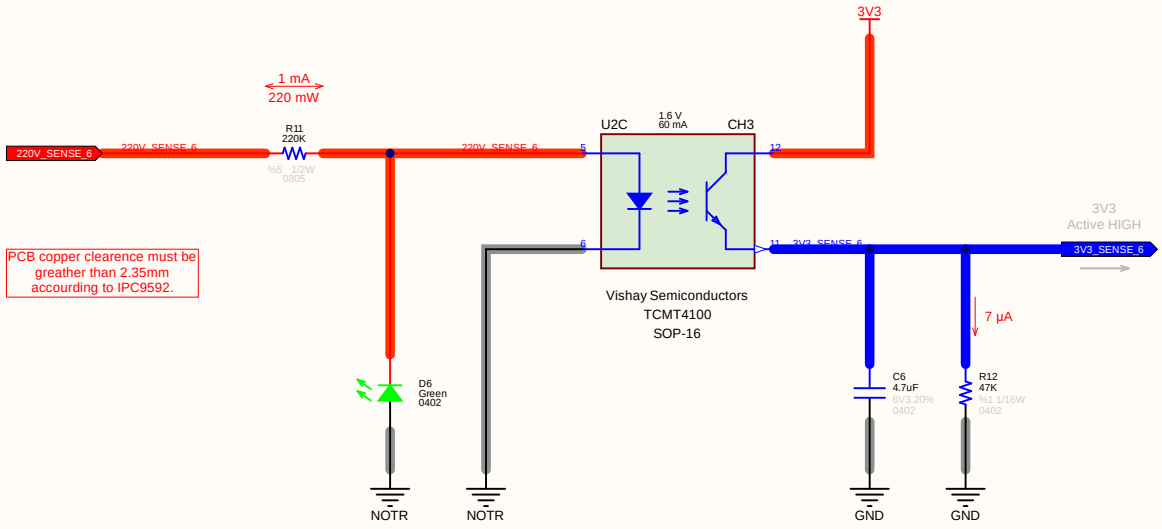

www.github.com/akkoyun/B001AA

Opto Isolator 6		Engineer :	Gunce Akkoyun
		Customer :	STF Irrigation
Size : A4	Project : PowerStat	Product ID :	--
		Module ID :	B302AA-PCIe
Date : 10.10.2022	Time : 11:42:32 / Page : 9 / 10	Version :	R1
File : Opto Isolator 6.SchDoc		Revision :	00.00.01

STF Res-Dev

Buyuk Kayacik Mah. 4. OSB
103. Cad. No : 12
Selcuklu / Konya Türkiye

Copyright 2022 STF Tarim (Commercial Secret)

© 2021 All rights reserved.
This document may not, in whole or in part, be copied, photocopied, reproduced, translated or converted to any electronic or machine readable from without prior written permission of Mehmet Günce Akkoyun.
Engineer contact : akkoyun@me.com

Property of STF Irrigation

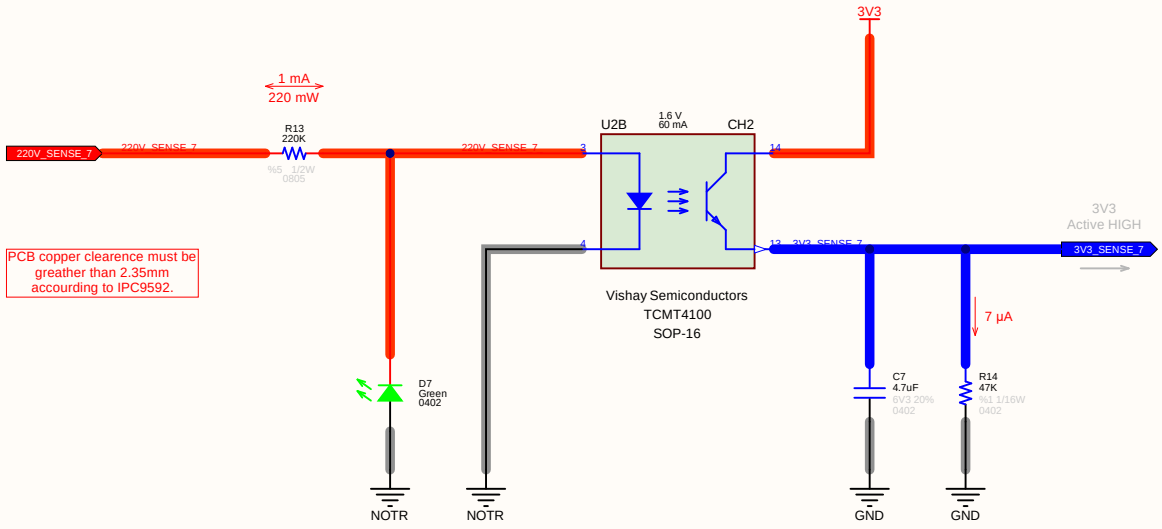

www.github.com/akkoyun/B001AA

Opto Isolator 7		Engineer : Gunce Akkoyun	STF Res-Dev
		Customer : STF Irrigation	Buyuk Kayacik Mah. 4. OSB
Size : A4	Project : PowerStat	Product ID : --	103. Cad. No : 12
		Module ID : B302AA-PCIe	Selcuklu / Konya Türkiye
Date : 10.10.2022	Time : 11:42:32	Page : 10 / 10	Version : R1
File : Opto Isolator 7.SchDoc		Revision : 00.00.01	

Copyright 2022 STF Tarim (Commercial Secret)

© 2021 All rights reserved.
This document may not, in whole or in part, be copied, photocopied, reproduced, translated or converted to any electronic or machine readable from without prior written permission of Mehmet Günce Akkoyun.
Engineer contact : akkoyun@me.com

Property of STF Irrigation

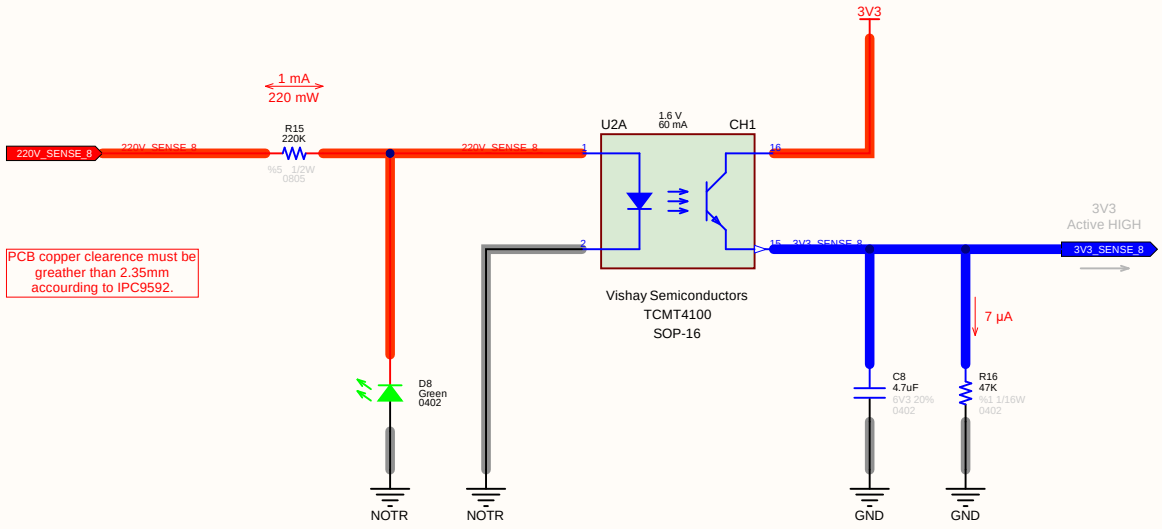

www.github.com/akkoyun/B001AA

Opto Isolator 8		Engineer :	Gunce Akkoyun
		Customer :	STF Irrigation
Size : A4	Project : PowerStat	Product ID :	--
		Module ID :	B302AA-PCIe
Date : 10.10.2022	Time : 11:42:32	Page : 11 / 10	Version : R1
File : Opto Isolator 8.SchDoc			Revision : 00.00.01

STF Res-Dev

Buyuk Kayacik Mah. 4. OSB
103. Cad. No : 12
Selcuklu / Konya Türkiye

Copyright 2022 STF Tarim (Commercial Secret)